Acetylene Detector-Transmitter
E2608-C2H2

IP65 | 4-20mA 0-10V | RS485 Modbus

Features

- Wall-mount or duct-mount version
- Industrial housing, attached or remote sensor
- Two relays for alarm / ventilation control
- Two analog outputs settable to 4-20 mA or 0-10 V
- RS485 Modbus RTU digital interface

Specifications
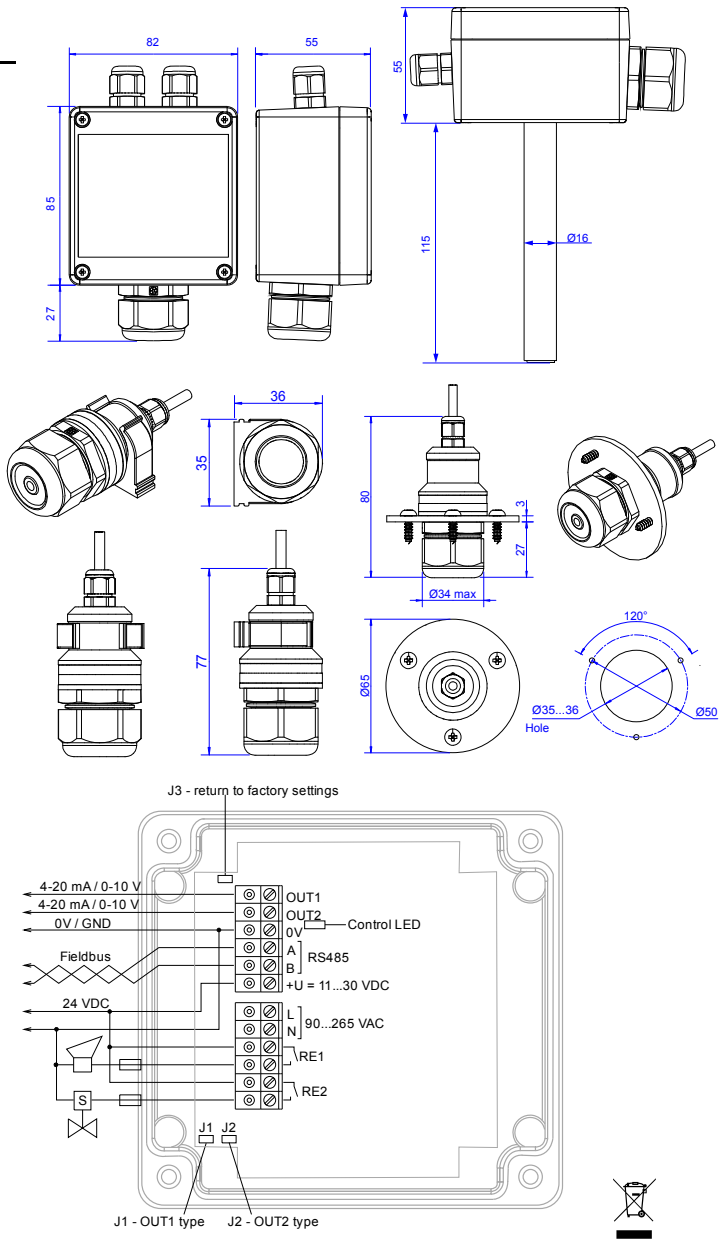
Detected gas	Acetylene
Calibration	Acetylene
Sensing method	long-life metal-oxide gas sensor
Sampling method	diffusion
Detection range	0...100% LEL (0...2,5 %vol) C_2H_2
Resolution / digital unit	0,1 %LEL (25 ppm) C_2H_2
Accuracy	± 5 %LEL (± 0,125 %vol)
Signal update	every 1 second
Response time	<5 min
Maintenance interval	12 months
Sensor lifetime	> 10 years
Self-diagnostics	full functionality check at start-up
Warm-up time	≤ 1 min
Power supply	11...30 VDC or 90...265 VAC
Power consumption	< 2 W
Digital interface	RS485, Modbus RTU protocol
Analog outputs	2 × 4-20 mA / 0-10 V, user settable
Output relays	2 × SPST relays (closing contact), 250 VAC / 30 VDC, 5 A max
Default alarm set-points	LOW: 0,5 %vol (20%LEL) HIGH: 1,25 %vol (50%LEL)
Enclosure	light grey ABS plastic, wall mount, protection class IP65
Dimensions	H85 × W82 × D55 mm
Cable options for remote probe	shielded cable, 2.5 or 5 m
Operating environment	industrial indoor and outdoor locations
Operating conditions	-40...+70 °C, 15...90 %RH